HI-TECH SPRAY EQUIPMENT, S.A.

Service Manual

BLAZE GUN

Issue 1.5
16/11/2026
Ref. NR-00150-ENG



Before installing and operating the BLAZE GUN, carefully read the technical and safety documentation in this manual. Special attention should be paid to the information in order to know and understand the handling and conditions of use of the Unit. All of the information is aimed at enhancing User Safety and avoiding possible faults due to incorrect use of the Unit.

WARRANTY

HI-TECH SPRAY EQUIPMENT, S. A. (hereinafter “HI-TECH”) grants this Limited Guarantee to the original buyer (hereinafter the “Client”) for the unit and the original accessories given with the unit (hereinafter the “Product”) against any fault in the design, materials or manufacture of the Product at the time of the first purchase by the user and for a duration of two (2) years thereafter, except in the case of hoses and TSU’s, which will have a warranty period of one (1) year. Additionally, for any other product manufactured by external suppliers, the warranty period will be as specified by the manufacturer.

If during the guarantee period and under normal conditions of use, the Product should fail to work correctly due to defects of design, material or manufacture, the authorised distributor of the country where the HI-TECH Product or technical assistance service has been purchased shall repair or replace the Product in accordance with what is established in the following:

CONDITIONS

a) The validity of this guarantee will be subject to the presentation of the original invoice issued by the HI-TECH authorised distributor for the sale of the Product along with the Product handed over for repair or replacement, which must show the date of purchase and the serial number. HI-TECH reserves the right to refuse to give the guarantee service when the indicated data fail to appear on the invoice or have been modified after the purchase of the Product.

b) The repaired or replaced Product will continue to maintain the original guarantee for the time remaining until the end of the guarantee or for three (3) months from the repair date, if the remaining period of the original guarantee were shorter.

c) This guarantee will not be applied to the faults in the Product caused by its faulty installation, the natural wear and tear of the components, any use other than that considered normal for this Product or which should fail to strictly comply with the instructions of use provided by HI-TECH; due to accident, carelessness, adjustments, alterations or modifications of the Product not authorised by HI-TECH or due to the use of accessories, heating devices, pumping equipment and/or dispensers that have not been approved or manufactured by HI-TECH.

d) The guarantee applicable to the components and accessories forming part of the Product and which have not been made by HI-TECH will be limited to the guarantee offered by the original manufacturer thereof.

HI-TECH WILL NOT RECOGNISE ANY EXPRESS ORAL OR WRITTEN GUARANTEES OTHER THAN THIS PRINTED LIMITED GUARANTEE. ALL IMPLICIT GUARANTEES, INCLUDING, WITHOUT LIMIT, ADAPTATION FOR A SPECIFIC USE, ARE SUBJECT TO THE DURATION OF THIS WRITTEN GUARANTEE. HI-TECH DOES NOT ASSUME ANY KIND OF COMMITMENT OR RESPONSIBILITY FOR ALL POSSIBLE DAMAGE OR EXPENSE CAUSED BY FAULTS IN THE OUTPUT OF THE PRODUCT, ITS WORKING OR THE DISPENSING OF MATERIAL THROUGH THE PRODUCT, INCLUDING, WITHOUT LIMITATION, ALL EXPENSES CAUSED BY DAMAGE TO PEOPLE OR PROPERTY. EQUALLY, HI-TECH WILL IN NO CASE ACCEPT LIABILITY FOR THE LOSS OF SPECULATIVE PROFITS OR COMMERCIAL LOSSES. ALL REPAIRS OR REPLACEMENT OF FAULTY PRODUCTS WILL CONSTITUTE THE COMPREHENSIVE FULFILMENT OF HI-TECH'S OBLIGATIONS WITH RESPECT TO THE CLIENT. HI-TECH DOES NOT IN ANY WAY GUARANTEE THE SUITABILITY OR APTITUDE OF ITS PRODUCT FOR ANY PARTICULAR PURPOSE OR APPLICATION.

All information provided on components which have not been manufactured by HI-TECH and which is based on reports received from the original manufacturer, though considered precise and reliable, is provided without any guarantee or responsibility of any explicit or implicit kind.

All concession, sale or financial leasing of the Product by HI-TECH in no case explicitly or implicitly constitutes any authorisation, acceptance or concession for the use of any rights or patents, nor does it encourage, nurture or back their infringement.

The restrictions on the guarantee suppose no limitation on the legal rights of the consumer established in applicable national legislation, nor do they affect any rights derived from the bargain and sale agreement between the consumer and supplier.

All of the information provided in this manual has been included with the confidence that it is true, but this does not constitute any responsibility or implicit or explicit guarantee. **HI-TECH** reserves the right to make, at any time and without prior notice, the necessary improvements and modifications to this manual in order to rectify possible typographical errors, expand the information provided, and introduce the changes in the characteristics and functions of the gun.

SAFETY AND HANDLING

The equipment described in this manual has been designed and manufactured in compliance with the following European Directives, following as application guide the harmonized standards detailed and in conformity with the relevant UK Statutory Instruments (and their amendments):

Directive 2006/42/EC on machinery (UK Supply of Machinery (Safety) Regulations 2008)

UNE EN 12100:2012 (BS EN ISO 12100:2010)

UNE EN 1953:2013 (BS EN 1953:2013)

Directive 2014/68/EU on pressure equipment (UK Pressure Equipment (Safety) Regulations 2016)

UNE EN 809:1999 +A1 (BS EN 809:1998 +A1:2009)

Directive 2011/65/EU on the restriction of the use of certain hazardous substances in electrical and electronic equipment with amendment 2015/863/EU (UK The Restriction of the Use of Certain Hazardous Substances in Electrical and Electronic Equipment Regulations 2012)

Directive 2012/19/EU on waste electrical and electronic equipment (UK The Waste Electrical and Electronic Equipment Regulations 2013)

CE UKCA

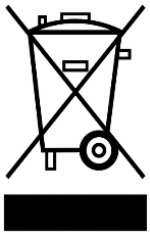

Electrical products cannot be thrown out with the rubbish. They must be taken to a dedicated collection point for an environmentally sound disposal in accordance with local regulations. You must contact your local collective or retailer for information about recycling. Before leaving WEEE at appropriate collection facilities, batteries must be removed and disposed of separately for proper recycling. The packaging materials are recyclable. Dispose of packaging materials in an environmentally sound manner and place them at the disposal of recycling sectors.

TRANSPORT AND STORAGE

Proper precautions must be taken so that the equipment can withstand the effects of transport and storage temperatures between -25°C and +55°C or up to +70°C for short periods that do not exceed 24 hours. Also, appropriate means to prevent damage from moisture, vibrations or shocks must be foreseen.

This chapter contains important information on safety, handling and use of your **BLAZE GUN**.



Before installing and operating the gun, carefully read the technical and safety documentation in this manual. Special attention should be paid to the information for knowing and understanding the handling and conditions of use of the gun. All of the information is aimed at enhancing User Safety and avoiding possible faults due to incorrect use of the gun.

A WARNING! establishes information for alerting you on the situations which could cause serious injury if the instructions are not followed.

A PRECAUTION! establishes information which indicates how to avoid damage to the gun and how to avoid a situation which could cause minor injuries.

A NOTE is relevant information on the procedure being carried out.

Careful study of this manual will help you to become more acquainted with the gun and the procedures. Following the instructions and recommendations here will reduce the potential risk of accidents in installing, using or maintaining the gun, and will give you the problem-free operation for a longer time, greater output and the possibility of detecting and resolving problems quickly and simply.

Keep this Service Manual for future consultation of useful information at all times. If you lose the manual, ask for a new copy from your local **HI-TECH** distributor or make direct contact with **HI-TECH SPRAY EQUIPMENT, S. A**.

WARNING**: **The gun's design and configuration do not allow it to be used in potentially explosive atmospheres or to exceed the pressure and temperature limits described in the technical specifications of this manual.

Always use liquids and solvents that are compatible with the unit. In the event of doubt, consult the **HI-TECH** technical service.

When working with the gun, it is essential to dress suitably and use personal protection equipment, including the unlimited use of gloves, protective goggles, safety footwear and face masks. Use breathing equipment when working with the gun in enclosed or insufficiently ventilated atmospheres. The introduction and follow-up of safety measures must not be limited to those described in this manual. Before starting to use the gun, a rigorous analysis must be made of the risks derived from the products to be dispensed, the type of application and the working environment.

The gun forms part of the projection equipment, which is why all safety measures must be taken that are provided for the start-up use of the equipment, in addition to all specific measures for the use of the gun.



Carefully read the safety data sheet provided by your supplier to prevent any possible injury caused by incorrect handling of the raw materials and solvents used in the process.

Deal with the waste caused according to current regulations.



To prevent serious damage caused by the impact of fluids under pressure, never open a connection or do maintenance work on components subject to pressure until you are sure that all pressure has been eliminated.

Use suitable protection when operating, maintaining or simply being in the area where the equipment is working. This includes, but is not limited to, the use of protective goggles, gloves, shoes and safety clothes and breathing equipment.



The equipment includes components which reach high temperatures and may cause burns. The hot parts of the unit must not be handled or touched until they have completely cooled.



To prevent serious injury caused by crushing or amputations, do not work with the equipment if the moving part safety protections are not duly installed. Make sure that all safety protections are correctly fitted after carrying out repair or maintenance work on the equipment

CHARACTERISTICS

* High-pressure internal mixture
* Automatically cleaning by pressurised air
* No solvents required
* Mechanical spraying
* Exterior greasing of the mix chamber

Approximate weight (with Coupling Block): ..... **1.06 kg**
Approximate weight (without Coupling Block): ..... **0,90 kg**

Dimensions: ..... **H 20.5 cm / A 8.2 cm / L 17 cm**

SPECIFICATIONS

Maximum working pressure:	**246 bar (26 MPa)**
Required air pressure:	**6-8 bar (0.6-0.8 MPa)**
Maximum production ratio 1:1:	**18 kg/min**
Minimum production ratio 1:1:	**1.5 kg/min**
Opening force @ 6 bar:	**90 kg**
Closing force @ 6 bar:	**93 kg**
Approximate air consumption @ 6 bar (50 cycles/min):	**280 l/min**

Values obtained according to UNE-EN ISO 3746:1995 standard

A-weighted sound pressure level:	76.8 dB
A-weighted sound power level:	87.4 dB

GENERAL DESCRIPTION

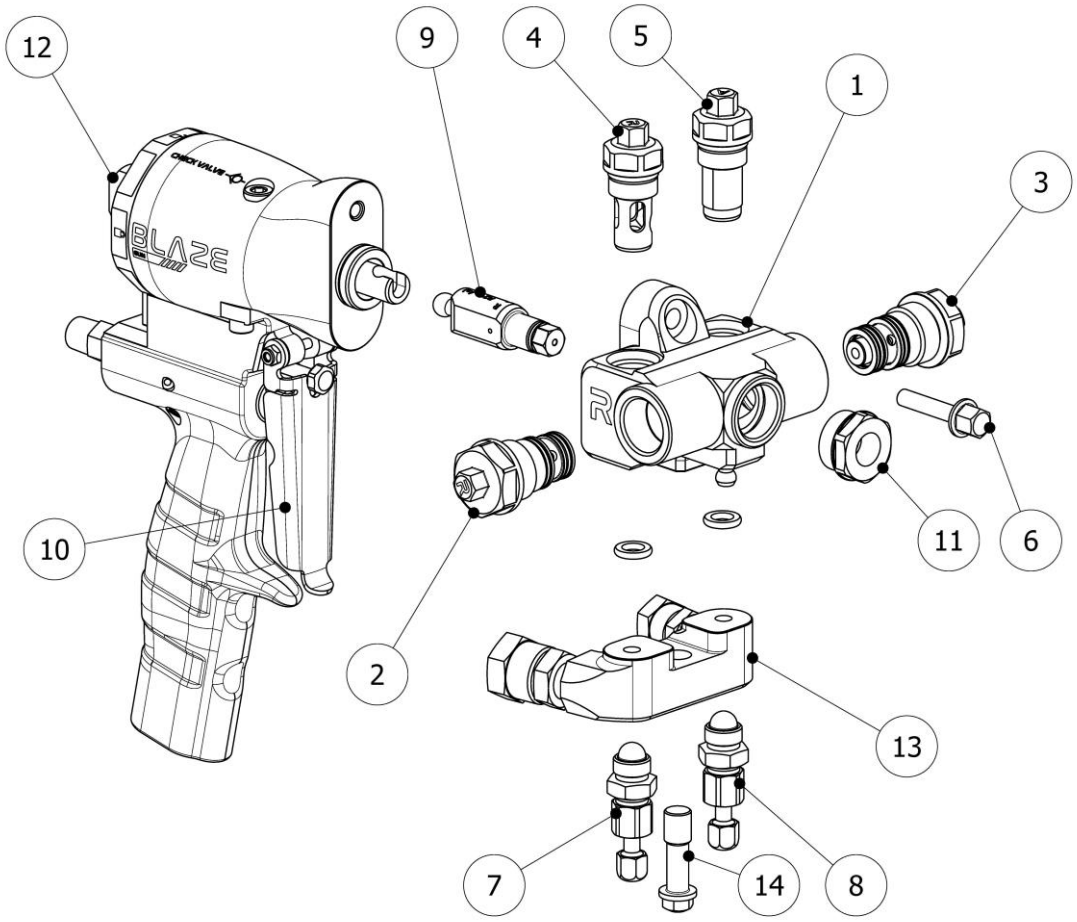

For a better understanding of the elements that make up the **BLAZE GUN**, the main components are shown, along with their descriptions. For more specific identification, see the Parts Manual ref. **NR-00149-ENG**.

1. Mixing Head Assembly.
2. Polyol Side Cartridge Assembly.
3. Isocyanate Side Cartridge Assembly.
4. Polyol Check Valve & Filter Cartridge Assembly.
5. Isocyanate Check Valve & Filter Cartridge Assembly.
6. Head Fixed Screw
7. Polyol Manual Valve.
8. Isocyanate Manual Valve.
9. Mixing Chamber
10. Trigger.
11. Diffuser.
12. Locking Device.
13. Coupling Block.
14. Coupling Block Fixed Screw.

METHOD OF THREADED UNION OF THE HOSES

Follow the torques for threaded joints listed in ***Table 1*** according to thread sizes of hose fittings to ensure their proper assembly.

There is also an alternative procedure to obtain an equivalent torque without using special tools: joint both ends of the hoses to be connected, tighten a swivel nut by hand (without using spanner) until there is resistance on the nut. Fit two spanners (1) on the fixed ends of the hoses and turn the swivel nut with a third spanner (2) as many flats from wrench resistance (FFWR) as indicated in ***Table 1***.

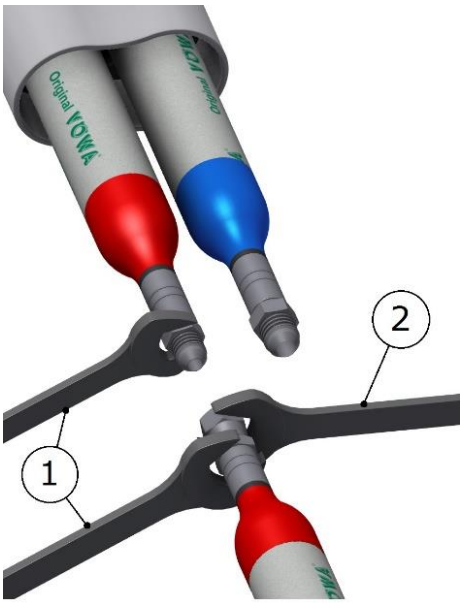

Table 1. Tightening Threaded Joints		
THREAD SIZE	TORQUE Nm	FFWR
1/2”-20	23	2 (or 120º)
9/16”-18	30	1-1/2 (or 90º)

NOTE: ***1 FFWR corresponds to one complete shear of a flat marked with red between swivel and fitting or else 60º.***

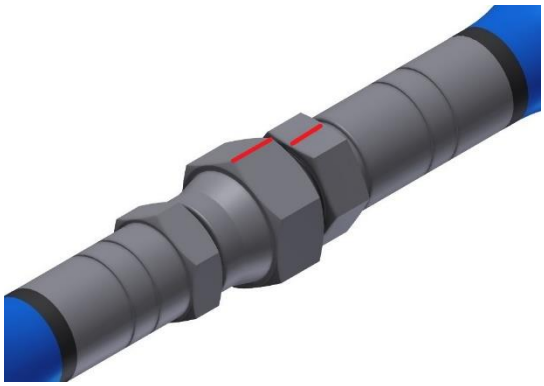

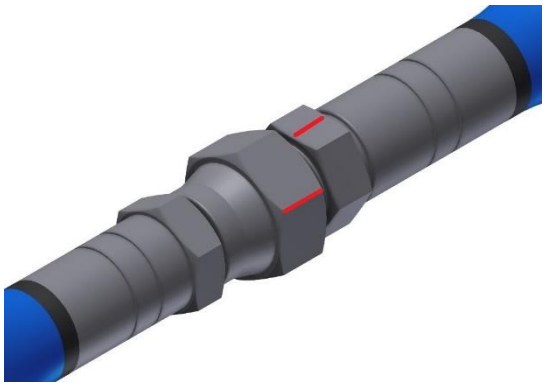

INSTALLATION AND START-UP

WARNING! ***When working with or maintaining the gun, you should wear appropriate protection in accordance with the recommendations and specifications provided by the product suppliers.***

HI-TECH provides a series of tools and accessories which are necessary for assembling the gun. The unit is made up of the following elements:

49gr. Grease Tube	**BI-00009**	1x
5/16" (8mm) Tube spanner	**HT-00054**	1x
Pin Vice	**HT-00060**	1x
Air hose supply	**MA-00027**	1x
F Quick connect	**RA-00109**	1x
Drill Bits	**According to Chamber Model (see NR-00149)**	
Reference Card	**EM-00172**	1x
Service Manual (*)	**NR-00150-ENG**	1x
Parts Identification Manual (*)	**NR-00149-ENG**	1x

(*) Manuals in digital format (USB storage)

1. Close the manual valves completely by turning them clockwise. The manual valves control the intake flow of each product into the chamber and are located in the Coupling Block.
2. Connect the air supply hose to the connector on the rear of the gun.
3. Connect the isocyanate hose (red terminal) to the isocyanate intake connector located on the Coupling Block.
4. Connect the Polyol hose (blue terminal) to the Polyol intake connector located on the Coupling Block.

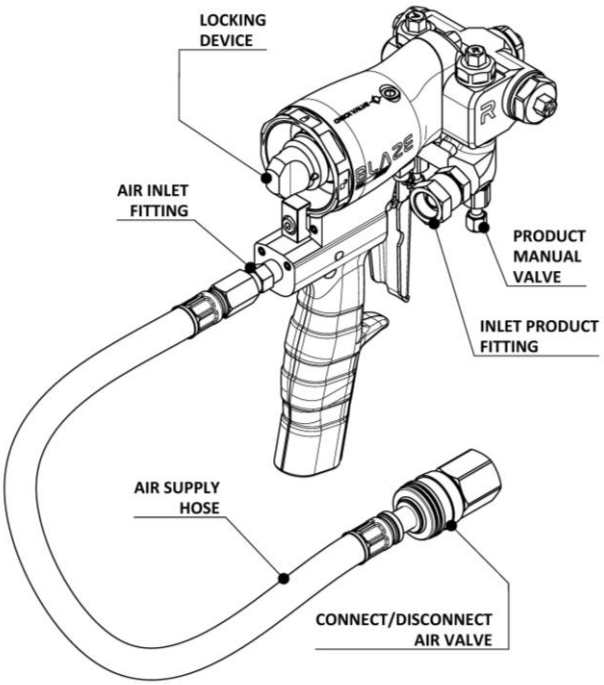

NOTE: ***The product hoses have been differentiated with the colors red and blue to allow quick identification. Red corresponds to the Isocyanate hose and Blue to the Polyol hose. To avoid connection errors, the coupling connectors of the Isocyanate and Polyol hoses are different sizes, which makes it impossible to mix up the connections.***

5. Connect the air valve.
6. Pressurize the unit and check for leaks.
7. Pull the trigger several times to verify the correct movement of the mixing chamber.
8. Ensure that the pressure in the machine and the temperature of the heaters and hoses is correct (see the Service Manual for the Machine).
9. Open the manual valves of each product completely by turning them counter-clockwise.
10. Press the locking device and rotate it counterclockwise to place it in the spray mode or position.
11. Perform a spray test inside a container

WARNING! ***Before carrying out any maintenance, repair or cleaning work, press the locking device and turn it clockwise to the locked mode or position, always remove the coupling block from the gun, completely close the manual product intake valves and disconnect the air supply to avoid possible accidents.***

SHUTDOWN PROCEDURES

1. Perform the Unit Shutdown Method by following the procedure in the machine's Service Manual.
2. Completely close the manual valves for each product by turning them clockwise.
3. To release the pressure in the gun, press the trigger and spray with the gun until the spray fan starts to decrease.
4. Press the plunger locking device and turn it clockwise to the locked position or mode.
5. Remove the check valve unit with filter on the polyol side located on the mixing block or mixing head. Clean it carefully with gun cleaning solvent making sure that the screen is completely free of product residues.
6. Proceed in the same way with the filter holder on the POL side.
7. Remove the coupling block from the gun. Clean the contact surfaces and seals of the check valves cartridges with a cloth moistened with solvent.

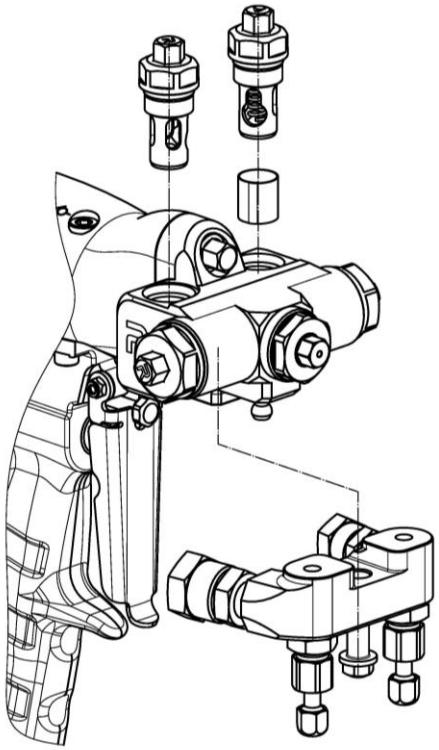

CAUTION! ***To avoid spilling product that has accumulated in the side cartridges and the check valves cartridges on the floor, always remove the coupling block and cartridges over a waste container.***

8. Unscrew and remove the front screw of head block. Loosen the side cartridges **ONE and A HALF TURN**. Remove the head block with the side cartridges Remove the head block with the side cartridges leaving the chamber hanging from the plunger shaft. Clean head assembly with gun cleaning solvent.

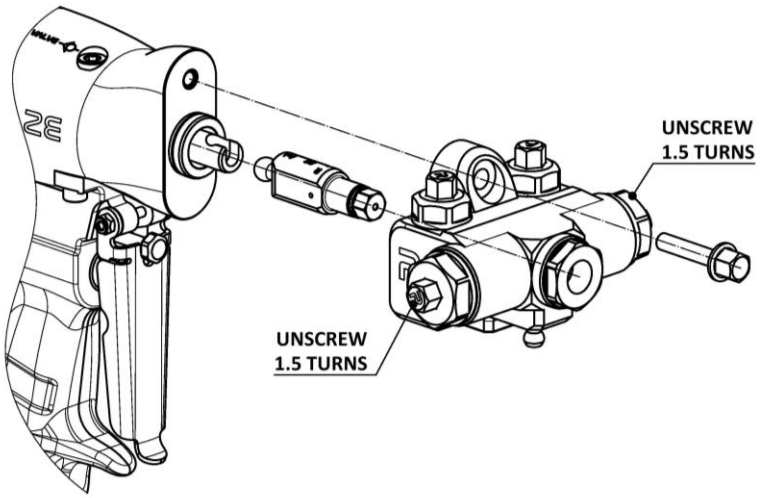

9. Remove the mixing chamber from shaft.
10. Clean both contact surfaces of mixing chamber. If necessary, drill the bore holes of the chamber with the cleaning drill bits.

CAUTION! ***Use wooden or plastic utensils or a brass brush for cleaning. Do not use metal utensils that could scratch the contact surfaces.***

11. Assemble all components in reverse order and place the coupling block on the gun.
12. Greasing the mixing chamber with a special pump through the front bore of the chamber and/or through the greasing point.
13. Grease the contact Surface between head block and coupling block, this action will prevent the cleaning air in the gun from drying the product residues, thus preventing them from crystallizing and clogging the head.

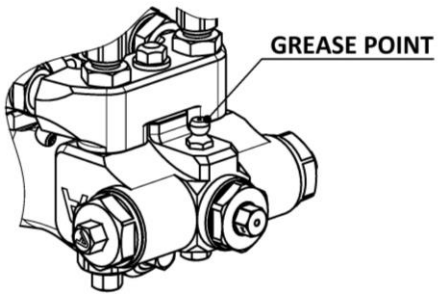

NOTE: ***Lubricating the gun at the end of the day will decrease maintenance time because the chamber will not need to be disassembled each day to clean it.***

CAUTION! ***To avoid possible contamination by product residues deposited on the gun components, do not mix up the Isocyanate and Polyol parts. The isocyanate side is identified on the gun with the letter A.***



If the product hoses are still pressurized, follow the Shutdown Method indicated in the Machine's Service Manual.

To relieve the pressure from the hoses with the gun disassembled, place the product intake coupling block in a suitable container, keep a safe distance away and open the manual valves very carefully and slowly. While under pressure, the product will come out of the top of the coupling block.

MAINTENANCE

To get the most out of your ***BLAZE GUN*** certain maintenance operations need to be performed on a regular basis.









To prevent possible bodily harm caused by incorrect handling of the raw materials and solvents used in the process, please read the safety data sheet provided by your supplier carefully.

Handle the generated wastes according to the regulations in force.

To prevent serious damage caused by the impact of pressurized fluids, never open connections or perform maintenance on pressurized components until you are sure that all pressure has been eliminated.

Use appropriate protection when working, maintaining, or while present in the working area of the equipment. This includes, but is not limited to, the use of protective goggles, gloves, safety shoes and clothing, and breathing equipment.

The equipment includes components that reach high temperatures and can cause burns. Do not handle or touch hot parts of the equipment until they have cooled completely.

To prevent serious injury caused by crushing or amputation, do not work on the equipment without properly installed safety guards for moving parts. Make sure that all safety guards are properly installed when you finish repairing or maintaining the equipment

Gun block and mixing chamber unit

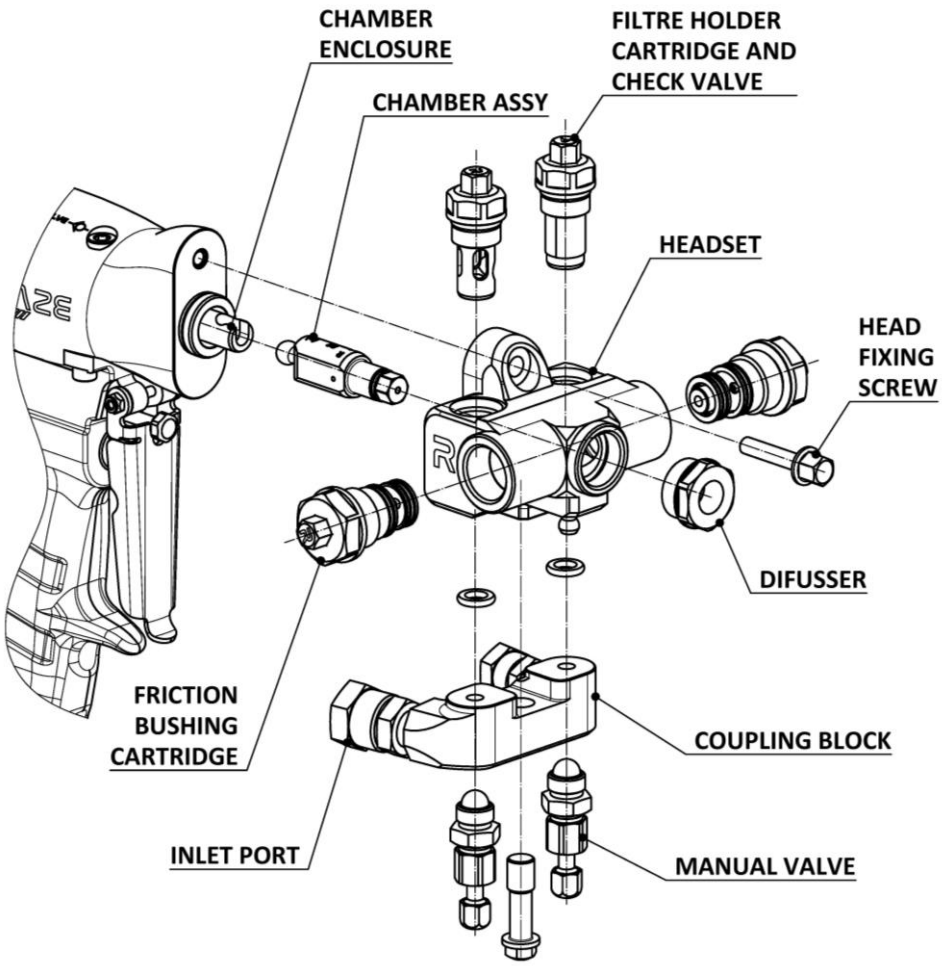

WARNING! ***Before carrying out maintenance work on the gun, make sure that the unit is completely stopped, that all buttons and the main switch are turned off and that the unit is disconnected from the main power supply. The gun is a component that works under pressure. You must not open any connections or carry out maintenance work on components under pressure until the pressure has been completely eliminated.***

1. Remove the coupling block.
2. Clean the contact surfaces and seals of the check valves cartridges with a cloth moistened with solvent.

NOTE: ***If you need to replace any of the manual valves due to breakage or damage, make sure that they are completely open (that the ball is housed inside the body of the manual valve) before installing it on the coupling block. If not, the taps could be damaged during assembly.***

CAUTION! ***To avoid spilling product that has accumulated in the cartridges on the floor, always remove the coupling block and cartridges over a waste container.***

3. Remove the check valve & filter cartridges as described in the section on the page 10.
4. Inspect the filters, clean them or replace them if necessary.

NOTE: ***The head, the cartridge cases, the coupling block and the filter cartridges have gaskets resistant to chemical agents, so these elements can be immersed in gun cleaning liquid for cleaning and/or preventive maintenance.***

5. Loosen the side cartridges **ONE** turn to remove the pressure against the mixing chamber.
6. Unscrew the head fixing screw and remove it by pulling the block forwards. Inspect the O-ring in the sleeve collar and replace it if necessary. Be especially careful not to lose the mixing chamber, as it hangs on the tip of the actuator stem.
7. Unhook the ball from the chamber housed in the end of the actuating stem. The mixing chamber will be released. Inspect it and replace it if it is damaged in any way.
8. To clean the product passage holes in the chamber, use the appropriate drill bits according to the size of the holes (see manual NR-00149).

NOTE: ***Chamber cleaning bits are enclosed with the chambers in the spare parts as well as in the gun tool kit.***

9. If you need to change the mix tip to modify the pattern size, unscrew it from the chamber and fit the desired tip. As a regular basis, each chamber is linked to a specific tip size, but intermediate results can be obtained by combining different chambers with different tips. For foam, it is advisable NOT to mount large tips on smaller chambers, as it may not be possible to open the spray pattern. On the contrary, for polyurea it is not advisable to mount small tips on larger bodies, as the overpressure may prevent the spray pattern from opening properly. It is also not advisable to mount tips that are TWO sizes smaller or larger than the body of the chamber, depending on whether you are projecting foam or polyurea, respectively. The tip of the chamber can be changed directly without dismantling any other part of the gun. Before doing so, make sure to activate the locking device and turn off the air supply.
10. If you need access for thorough cleaning of the side cartridges, proceed as described in the corresponding chapter on page16.
11. Unscrew the diffuser and examine the internal seal, replace it if necessary.
12. To remove product residues, place the gun block assembly in a container with gun cleaning fluid and rub it with a brass brush.

13. If you need access for thorough cleaning of the filters and backflow preventers in the head, proceed as described in the corresponding chapter on page 18.

CAUTION! ***Use wooden or plastic utensils, or a brass brush, for cleaning. Do not use metal utensils that can scratch the surface.***

To reassembly the gun, follow the procedure below:

1. If necessary, reinsert the filters into the filter housing and refit them in the head block.

NOTE: ***All parts marked with the letters 'A' or 'R' must be mounted on their corresponding side. Avoid mounting these parts crosswise (part A on side R and vice versa), as there is a risk of contamination of the ducts.***

2. If necessary, reassembly the side seals cartridge.
3. If applicable, thread the side seals cartridges by hand, paying attention to the location of each ("A" ISO side and "R" POL side). DO NOT thread the cartridges all the way in, leave a **TWO** turn margin.
4. Couple the ball end of the mixing chamber to the piston rod, paying attention to the orientation of the mixing chamber ('A' ISO side, 'R' POL side).
5. Slide the head over the mixing chamber, make sure to a proper alignment with the shaft guide and retighten the screw.
6. Place the diffuser in the head with its inner gasket fitted.
7. Tighten first the isocyanate cartridge and then the polyol cartridge with the 5/16 (8 mm) spanner supplied.
8. Mount the coupling block.

Side cartridge unit

WARNING! ***Before carrying out maintenance work on the gun, make sure that the unit is completely stopped, that all buttons and the main switch are turned off and that the unit is disconnected from the main power supply. The gun is a component that works under pressure. You must not open any connections or carry out maintenance work on components under pressure until the pressure has been completely eliminated.***

1. Perform the Unit Shutdown Method by following the procedure in the Machine's Service Manual.
2. Completely close the manual valves for each product by turning them clockwise.
3. To release the pressure in the gun, press the trigger and spray with the gun until the spray fan starts to decrease.
4. Disconnect the air supply from the gun.
5. Unscrew the isocyanate side cartridge by turning it counter-clockwise and remove it from its housing. Clean the housing with gun cleaning solvent and ensure that no loose particles are left inside.

CAUTION! ***Use wooden or plastic utensils, or a brass brush, for cleaning. Do not use metal utensils that can scratch the surface.***

NOTE: ***The head, the cartridge cases, the coupling block and the filter cartridges have gaskets resistant to chemical agents, so these elements can be immersed in gun cleaning liquid for cleaning and/or preventive maintenance.***

6. Check the o-rings of the cartridge and the side seal bushing. Replace them if they are worn or deteriorated.

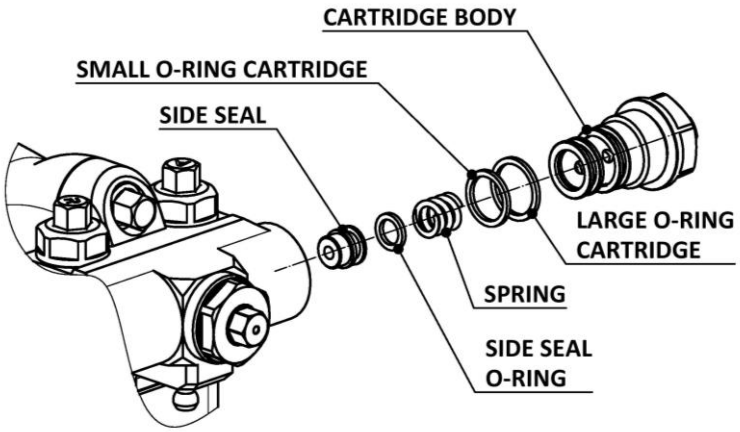

CAUTION! ***Pay attention to the order in which the seals are fitted, the largest seal is located closest to the flange of the cartridge.***

7. Check the metal side seal bushing for wear by checking the total length of the bushing. Replace it if the length is less than 7 mm.
8. Grease all of the components and reassemble them in the cartridge.
9. Screw the isocyanate cartridge unit into its housing until it stops at the base of the thread in the mixing head. Make sure it is correctly assembled to avoid product leaks. To do this, the largest seal of the cartridge should not be visible and the support face of the cartridge must be in contact with the seat base of the mixing head.
10. Do the same with the polyol cartridge (points 5-9).

11. If the head block **NOT** mounted on the gun, thread the isocyanate cartridge assembly into its housing until it stops and then turn counterclockwise (loosen) TWO turns.
12. Proceed in the same way with the polyol cartridge (item 11).
13. Carry out the spray procedure indicated in the start-up section.
14. Start the gun.

CAUTION! ***Use wooden or plastic utensils or a brass brush for cleaning. Do not use metal utensils that could scratch the contact surfaces.***

Filter and Check Valve Cartridge Unit

WARNING! ***Before carrying out maintenance work on the gun, make sure that the unit is completely stopped, that all buttons and the main switch are turned off and that the unit is disconnected from the main power supply. The gun is a component that works under pressure. You must not open any connections or carry out maintenance work on components under pressure until the pressure has been completely eliminated.***

1. Perform the Unit Shutdown Method by following the procedure in the Machine's Service Manual.
2. Completely close the manual valves for each product by turning them clockwise.
3. To release the pressure in the gun, press the trigger and spray with the gun until the spray fan starts to decrease.
4. Disconnect the air supply from the gun.
5. Remove the ISO check valve cartridge as shown on page 10, with the 5/16” (8 mm) spanner.
6. Separate the filter and clean it with gun cleaning solvent. Ensure that it is not clogged. If you notice that more than 20% of the surface area of the screen is clogged, replace it.
7. Inspect the O-ring and replace it if is necessary with special tool that not damage the rubber.
8. Clean all of the components thoroughly to remove product residue using a cloth moistened with gun cleaning solvent and a brass brush.
9. Make sure the holes of the filter holder cartridge are not blocked by remains of crystallized product. If you see dirt on the mixing head, clean the communication holes using a bit and brass brush.

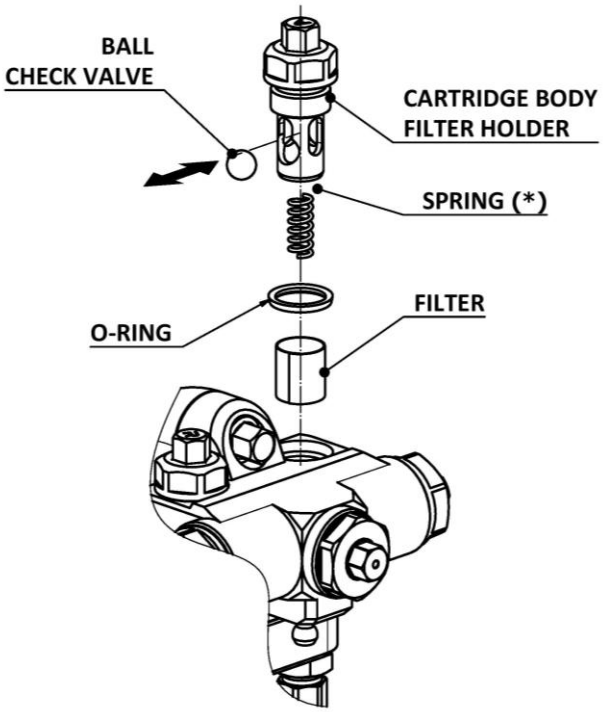

NOTA: ***If you need to remove the spring and ball from the filter housing for cleaning, proceed as follows:***

DISASSEMBLY

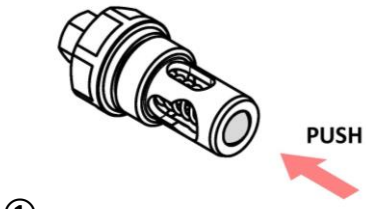

①

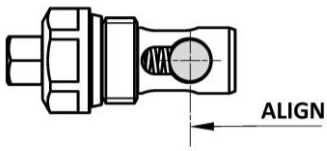

②

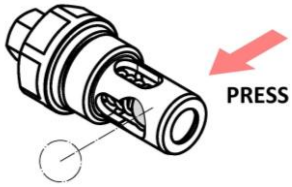

③

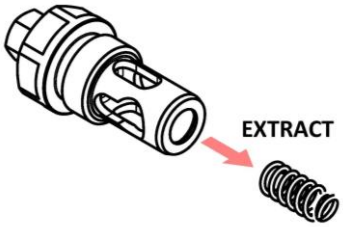

④

Pay attention! Don't lose the ball.

ASSEMBLY



①

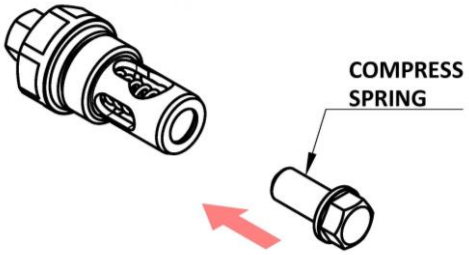

②

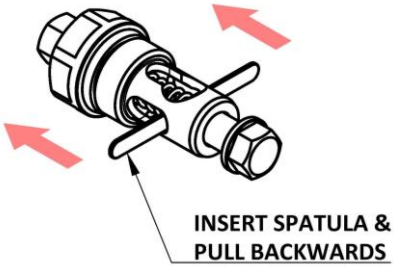

③

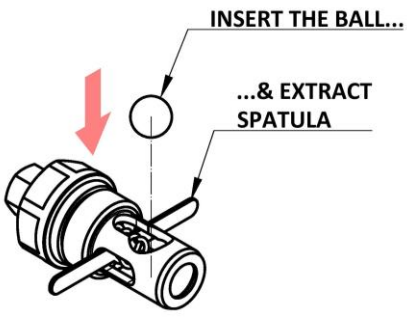

④

10. Reassemble the component set and repeat the operations for the POL side cartridge.

11. Carry out the projection procedure as described in the start-up section.

12. Star the gun.

Trigger and valve

WARNING! ***Before carrying out maintenance work on the gun, make sure that the unit is completely stopped, that all buttons and the main switch are turned off and that the unit is disconnected from the main power supply. The gun is a component that works under pressure. You must not open any connections or carry out maintenance work on components under pressure until the pressure has been completely eliminated.***

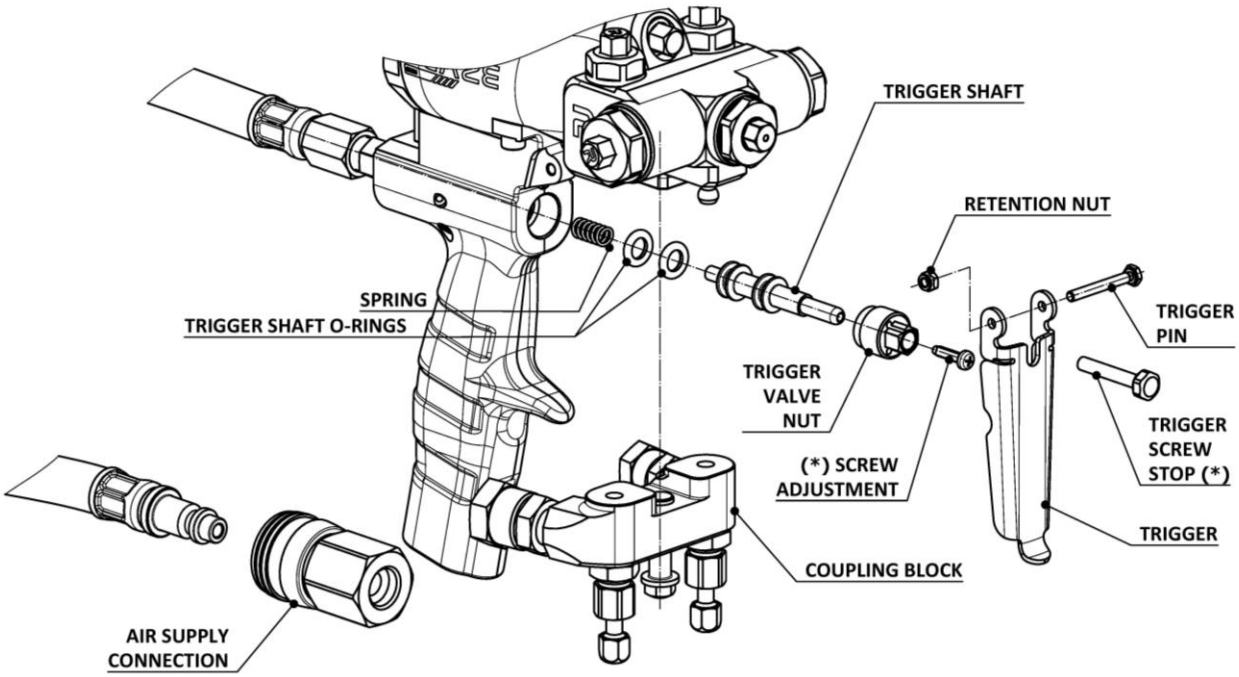

1. Remove the coupling block.
2. Clean the contact surfaces and seals of the check valves cartridges with a cloth moistened with cleaning fluid.
3. Disconnect the air supply hose.
4. Remove the trigger stop screw (*).
5. Remove the side pin holding the trigger.
6. Unscrew the nut on the trigger valve.
7. Remove the trigger shaft together with the valve nut and carefully grip the end with a pair of pliers to pull them out of the housing at the same time. The trigger shaft has an adjustment screw (*) at the tip and a spring at the base; take care not to lose them
8. Inspect the O-rings on the trigger shaft. Replace them if they are damaged. Apply a little grease to facilitate assembly.

9. Ensure that the trigger shaft housing is free of dirt and apply a small layer of grease inside.
10. Connect the air hose to the back of the gun using sealant paste on the thread to prevent air leaks.
11. Insert the spring into the rear end of the trigger shaft (with the adjustment screw and valve nut fitted to the front end), and insert the assembly into the grip, taking care not to damage the O-rings. You will feel some resistance caused by the O-rings rubbing against the wall of the housing.
12. Screw on the trigger valve nut until it stops at the bottom.
13. Attach the trigger and secure it with the side pin.
14. If necessary, with the trigger raised, adjust the trigger adjustment screw to the desired position (apply blue threadlocker).
15. Set the trigger to the rest position and tighten the trigger stop screw. Apply threadlocker and tighten it until the trigger play is eliminated (without moving the pin).
16. Attach the mixing block according to the procedure described in the assembly section of the gun and mixing chamber assembly.
17. Start the gun.

Trigger Position Adjustment

This gun features a trigger adjustment mechanism that allows the trigger position to be ergonomically adjusted to fit the user's hand.

1. To adjust it, unscrew the trigger stop screw and lift the trigger

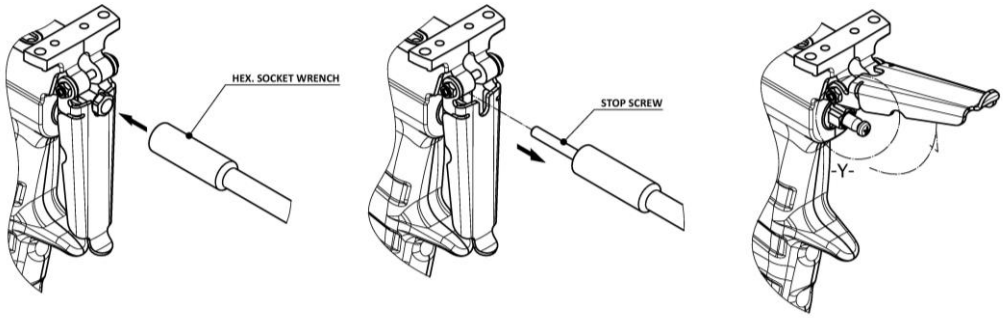

2. Using a Phillips-head screwdriver, tighten or loosen the screw at the end of the shaft to move the trigger closer to or further away from the handle

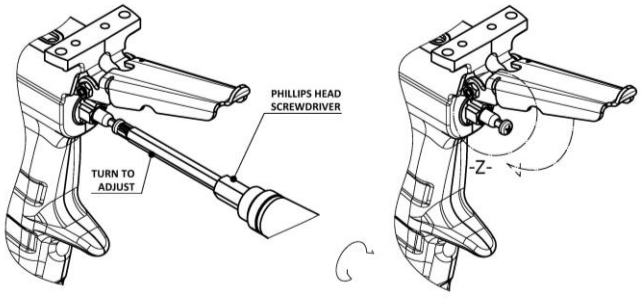

Lower the trigger to the rest position and check the ergonomics. If necessary, repeat the above procedure until you find the correct position

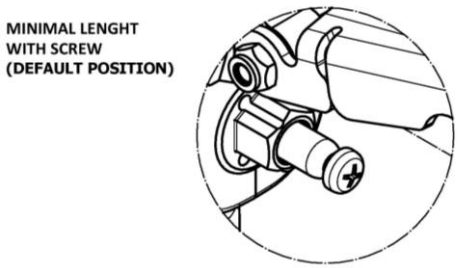

The minimum adjustment position is achieved without using the screw; to move it further forward, simply adjust the threaded screw from the minimum to the maximum position

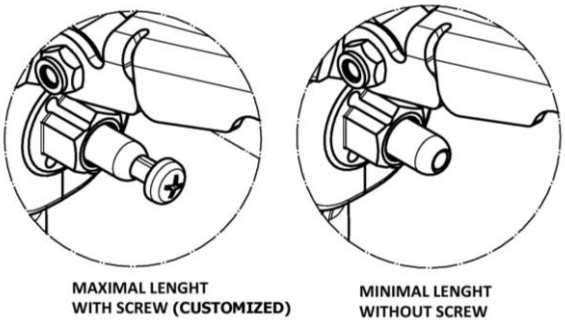

If the screw is too loose, remove it from the shaft, apply blue thread locker, wait a few moments, and then reinsert it into the shaft in the desired position.

The trigger actuation angle is approximately 7.5°.

POSITION WITHOUT SCREW

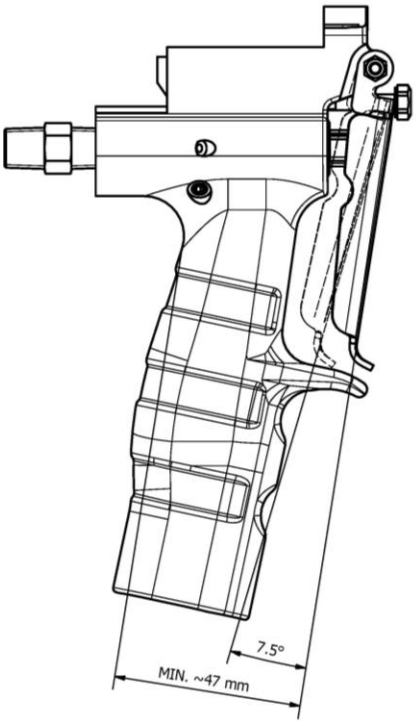

ADJUSTABLE POSITION WITH SCREW

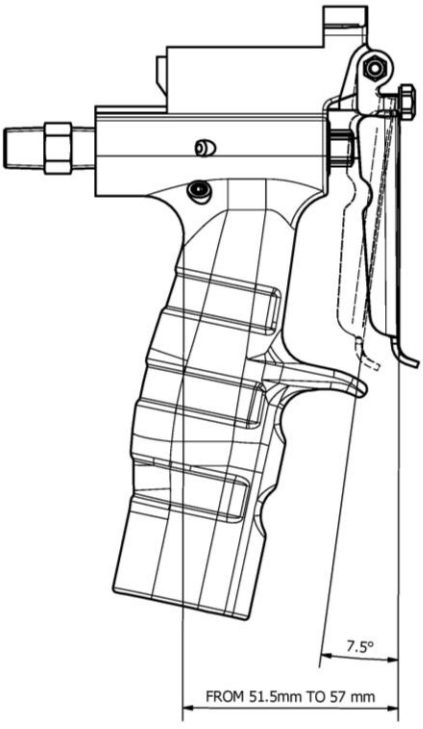

By default, the gun is supplied with the screw already fitted, close to the minimum adjustment position (~53 mm).

Cleaning the Air Circuit in the Handle

To clean the air circuit in the handle, follow the procedure below:

Detach the handle from the rest of the spray gun components.

Remove the trigger, the internal sliding valve, and the rear air inlet fitting.

Using an Allen key, remove the 9 plugs sealing the air circuit.

Insert an HT-00071 drill bit into a hand drill chuck so that it extends 50 mm (A), and an HT-00064 drill bit so that it extends 30 mm (B) from the other side.

The table below indicates the required insertion depth for each drill bit in its corresponding hole to ensure the channels are thoroughly cleaned.

	DRILL BIT REF.	HOLE DEPTH
HOLE 01	HT-00071	23.00 mm
HOLE 02	HT-00071	35.00 mm
HOLE 03	HT-00064	26.30 mm
HOLE 04	HT-00071	20.50 mm
HOLE 05	HT-00071	46.00 mm
HOLE 06	HT-00071	19.20 mm
HOLE 07	HT-00071	35.00 mm
HOLE 08	HT-00064	24.10 mm
HOLE 09	HT-00071	20.50 mm
HOLE 10	HT-00071	46.00 mm
HOLE 11	HT-00071	20.00 mm
HOLE 12.1	HT-00071	14.00 mm
HOLE 12.2	HT-00064	16.00 mm

Continuous air-pressure holes: 01, 02, 03, 04, 05 y 06

Front Chamber Cylinder holes: 07, 08, 09, 10 y 11

Rear Chamber Cylinder holes: 12.1 y 12.2

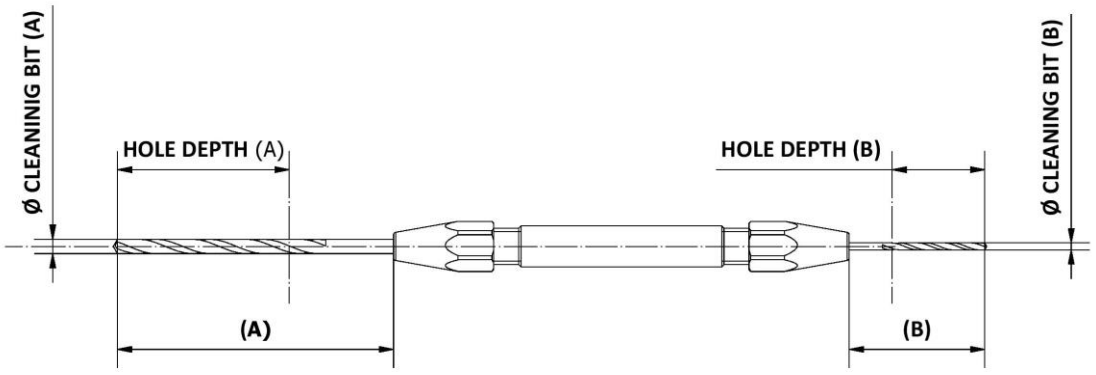

HOLE 01	HOLE 02	HOLE 03	HOLE 04
	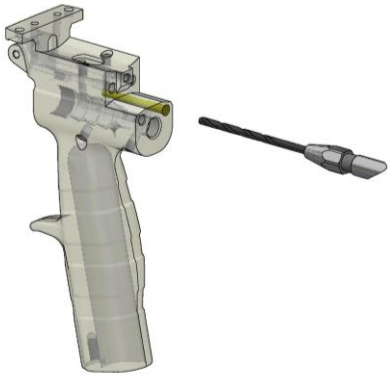	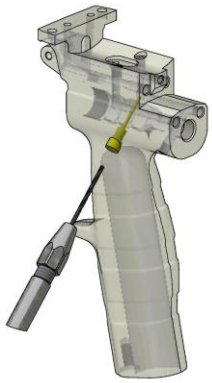	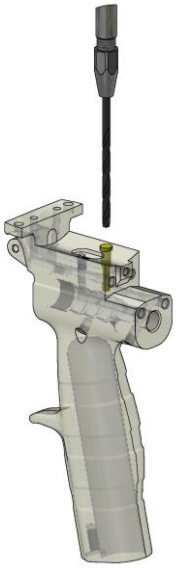
HT-00071 23.00 mm	HT-00071 35.00 mm	HT-00064 26.30 mm	HT-00071 20.50 mm

HOLE 05	HOLE 06	HOLE 07
	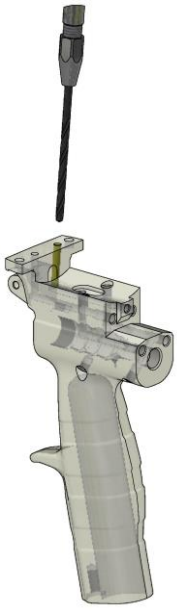	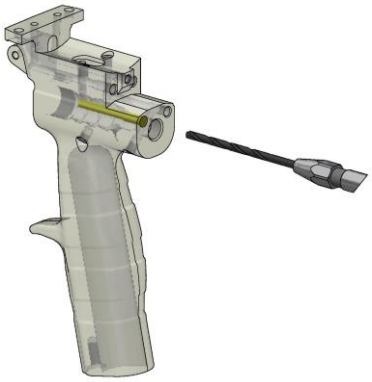
HT-00071 46.00 mm	HT-00071 19.20 mm	HT-00071 35.00 mm

HOLE 08	HOLE 09	HOLE 10	HOLE 11
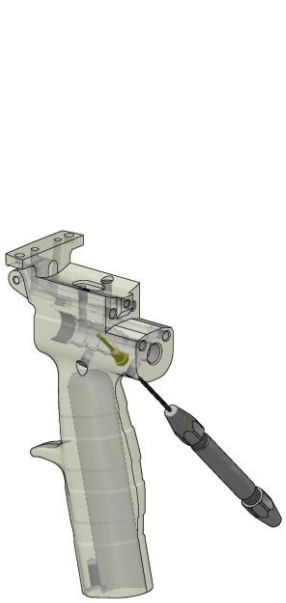	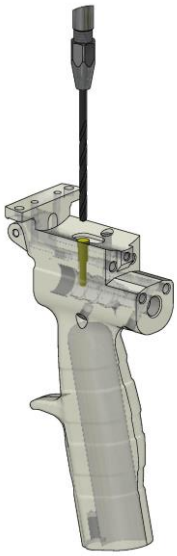	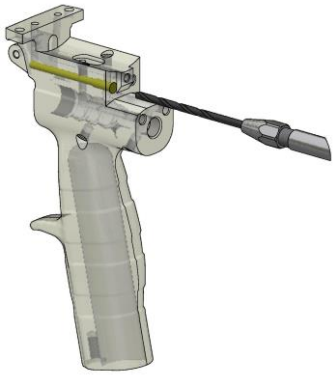	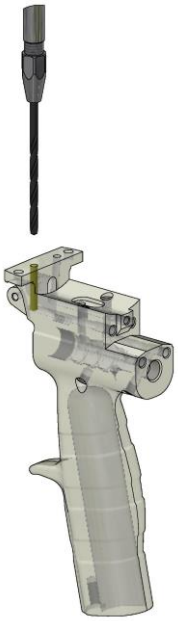
HT-00064 24.10 mm	HT-00071 20.50 mm	HT-00071 46.00 mm	HT-00071 20.00 mm

HOLE 12.1	HOLE 12.2
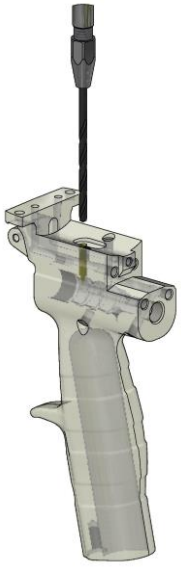	
HT-00071 14.00 mm	HT-00064 16.00 mm

Once the air circuit in the handle have been cleaned, reinstall the plugs and the components that complete the handle assembly. Finally, assemble the spray gun.

Cylinder block and locking device

WARNING! ***Before carrying out maintenance work on the gun, make sure that the unit is completely stopped, that all buttons and the main switch are turned off and that the unit is disconnected from the main power supply. The gun is a component that works under pressure. You must not open any connections or carry out maintenance work on components under pressure until the pressure has been completely eliminated.***

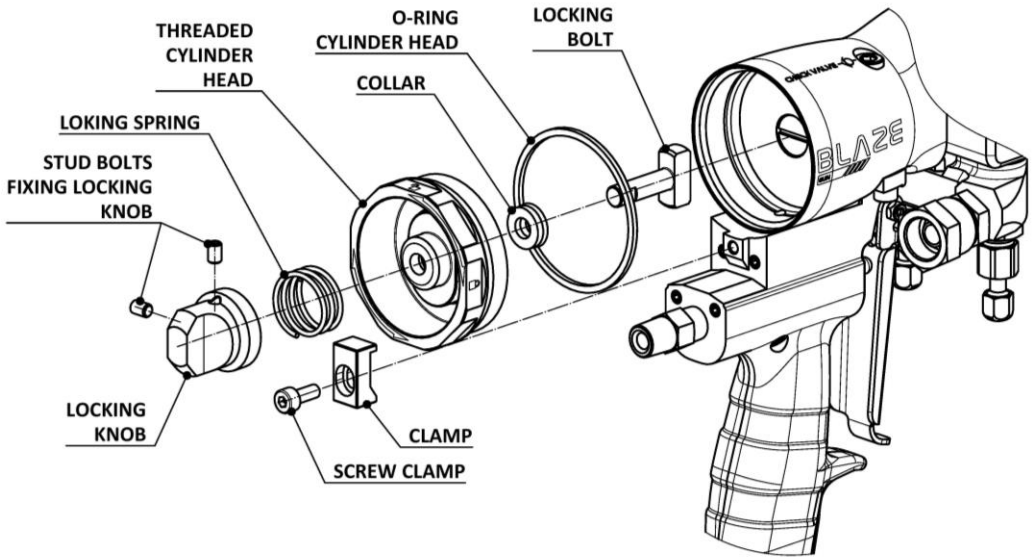

1. Unscrew the screw that secures the liner clamp at the rear of the gun.
2. Unscrew the cylinder head by turning counterclockwise.
3. Inspect the condition of the cylinder head seal. Replace it if it is damaged.
4. Apply a little grease to facilitate assembly.
5. Loosen the screw on the lock knob. Remove the locking screw and the locking spring from the device.
6. Separate the cylinder head from the locking bolt.
7. Remove the cylinder block collar from the cylinder and replace it if it is damaged. Apply a little grease to facilitate assembly.
8. Pay attention to the correct assembly of the collar **the closing lips must face the cylinder side.**

9. Attach the locking screw on the cylinder block. Slide the spring and locking device over the locking screw. Screw on the lock knob anchor screw. Ensure that the locking device is secure.
10. Thread the cylinder head assembly into the cylinder liner, make sure that it reaches its final position and that the gasket is correctly inserted (the gasket should not be visible from the outside once the cylinder head has been fully rotated).
11. Attach the liner clamp and secure it with the screw at the rear of the gun.
12. Start the gun.

Pneumatic cylinder

WARNING! ***Before carrying out maintenance work on the gun, make sure that the unit is completely stopped, that all buttons and the main switch are turned off and that the unit is disconnected from the main power supply. The gun is a component that works under pressure. You must not open any connections or carry out maintenance work on components under pressure until the pressure has been completely eliminated.***

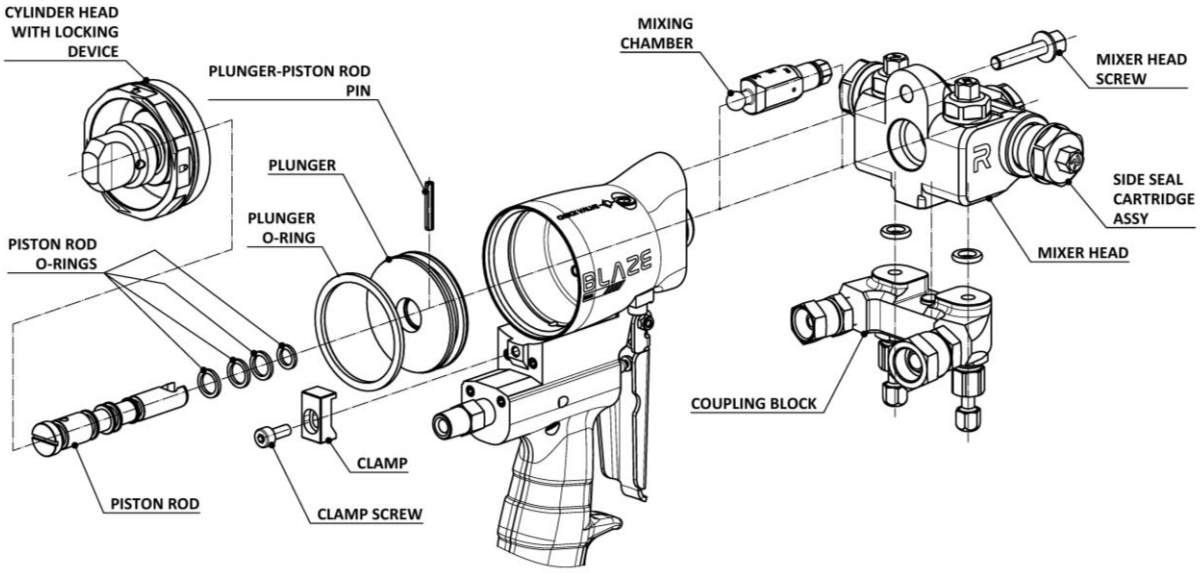

1. Remove the mixing chamber according to the procedure on page 13. Clean the mixing chamber and run a bit through the holes, if necessary.
2. Unscrew the screw that secures the liner clamp at the rear of the gun.
3. Manually unscrew the cylinder head with the locking device and pull the entire unit out.
4. From the front of the gun, push the cylinder shaft and pull the entire plunger assembly out of the sleeve.
5. Inspect the condition of the plunger shaft (4) and the plunger (1). Replace them if they are damaged. Apply a little grease to facilitate assembly.
6. Insert the plunger assembly into the cylinder sleeve taking special care not to damage the O-rings. The chamber housing on the piston rod should protrude from the front of the cylinder body.
7. Screw the cylinder head assembly with the knob in the locked position onto the cylinder liner until it reaches its final position.
8. Attach the liner clamp and secure it with the screw at the rear of the gun.
9. Mount the camera in its correct position (A side ISO and R side POL) inside the spherical housing of the stem tip.

10. Insert the mixing head according to the procedure described in the section on assembling the gun block and mixing chamber assembly (see page 13)
11. Make sure the O-ring between the block and the liner collar is in place, replace it if it is damaged.
12. Start the gun.

CONTENT

Warranty 2
Safety and Handling 3
Characteristics 6
Specifications 6
General Description 7
Method of Threaded Union of the Hoses 8
Installation and Start-Up 9
Shutdown Procedures 10
Maintenance 12
Gun block and mixing chamber unit 13
Side cartridge unit 16
Filter and Check Valve Cartridge Unit 18
Trigger and valve 20
Trigger Position Adjustment 21
Cleaning the Air Circuit in the Handle 23
Cylinder block and locking device 26
Pneumatic cylinder 28
Content 30